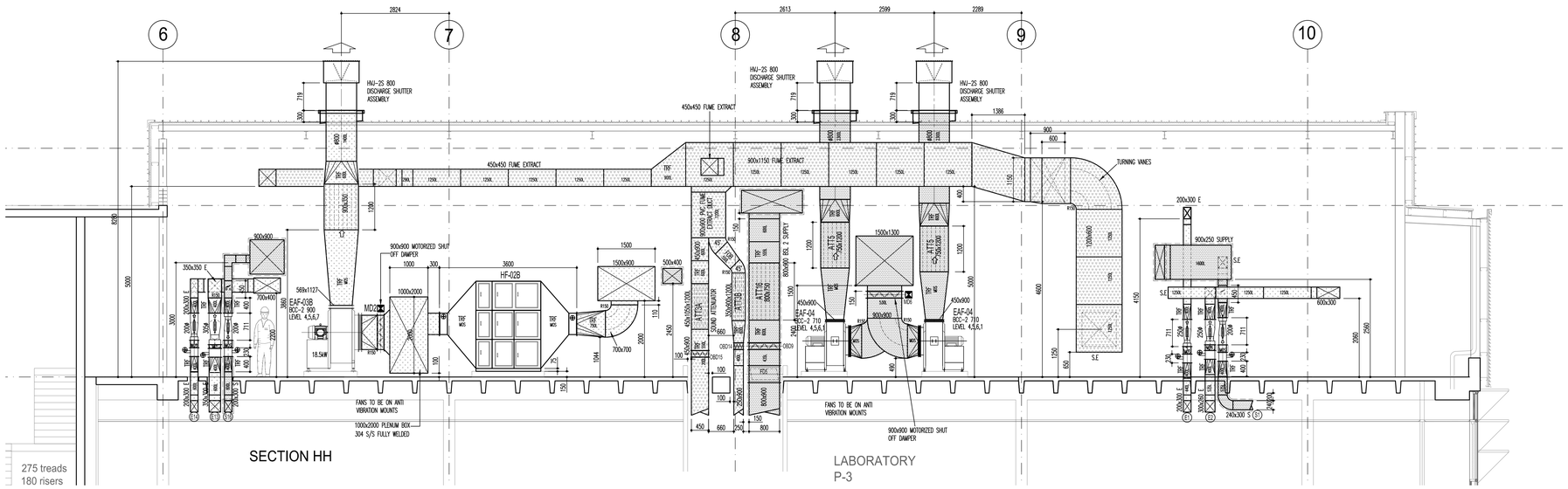
6
7
8
9
10
2824
2613
2599
2289
HVJ-2S 800 DISCHARGE SHUTTER ASSEMBLY
450x450 FUME EXTRACT
900x1150 FUME EXTRACT
TURNING VANES
900x900 MOTORIZED SHUT OFF DAMPER
HF-02B
EAF-03B BCC-2 900 LEVEL 4,5,6,7
EAF-04 BCC-2 710 LEVEL 4,5,6,1
900x250 SUPPLY
FANS TO BE ON ANTI VIBRATION MOUNTS
1000x2000 PLENUM BOX 304 S/S FULLY WELDED
900x900 MOTORIZED SHUT OFF DAMPER
275 treads
180 risers
SECTION HH
LABORATORY
P-3

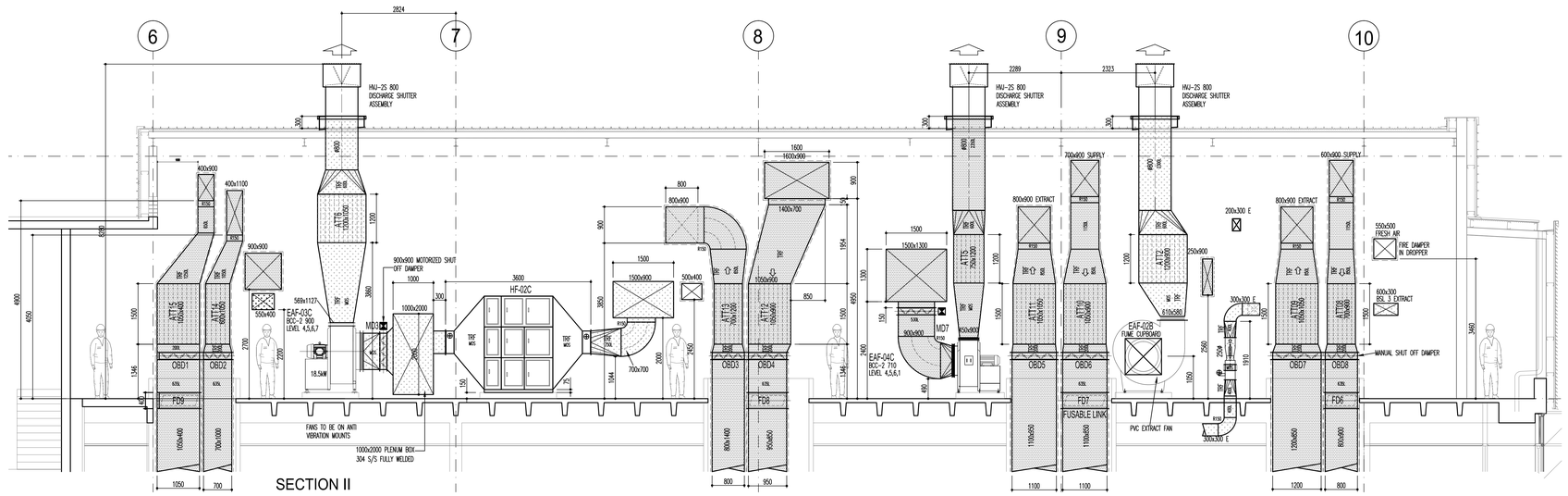
6
7
8
9
10
2824
2289
2323
HVJ-2S 800 DISCHARGE SHUTTER ASSEMBLY
900x900 MOTORIZED SHUT OFF DAMPER
HF-02C
EAF-03C BCC-2 900 LEVEL 4,5,6,7
EAF-04C BCC-2 710 LEVEL 4,5,6,1
EAF-02B FUME CUPBOARD
PVC EXTRACT FAN
FUSABLE LINK
MANUAL SHUT OFF DAMPER
FIRE DAMPER IN DROPPER
FANS TO BE ON ANTI VIBRATION MOUNTS
1000x2000 PLENUM BOX 304 S/S FULLY WELDED
SECTION II

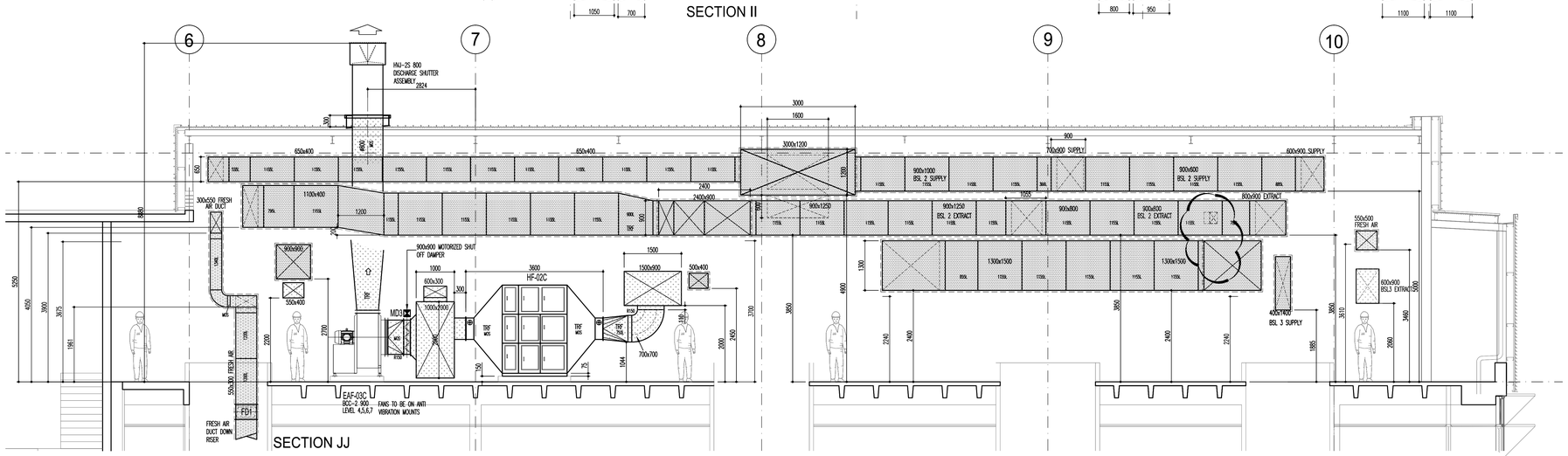
6
7
8
9
10
HVJ-2S 800 DISCHARGE SHUTTER ASSEMBLY
2824
900x900 MOTORIZED SHUT OFF DAMPER
HF-02C
EAF-03C BCC-2 900 LEVEL 4,5,6,7
FANS TO BE ON ANTI VIBRATION MOUNTS
FRESH AIR DUCT DOWN RISER
BSL 3 SUPPLY
SECTION JJ